SPF Solartechnik Prüfung Forschung

Institut für Solartechnik
Hochschule für Technik Rapperswil
Oberseestrasse 10, CH 8640 Rapperswil
Tel +41 55 222 48 21, Fax +41 55 222 48 44
www.solarenergy.ch

STS 301

Ordered by:

HEWALEX
Witosa 14 A

PL-43-512 Bestwinka

Tel. +48 (032) 214 17 10
Fax: +48 (032) 214 50 04

Test Report No. C1030QPEN

Tests according to EN 12975-2: 2006, Paragraph 5

Content: **page**

1 Description of Collector 2
1.1 Technical Data of Sample 2
1.2 Sketch of Collector 3
1.3 Specifications on Elements 3
1.4 Photo of Collector 4
1.5 Sketch of Collector Mounting 4
1.6 Labelling 5
1.7 Safety 5
1.8 Installer Instruction Manual 5
2 Test Methods and Results 6
2.1 Tests of Durability 6
2.2 Test Sequence and Summary 6
2.3 Internal Pressure Test 7
2.4 High-Temperature Resistance Test 7
2.5 Exposure Test 8
2.6 External Thermal Shock 11
2.7 Internal Thermal Shock 12
2.8 Rain Penetration Test 13
2.9 Mechanical Load Test 14
2.10 Final Inspection 14
3 Remarks 15

1 Description of Collector

1.1 Technical Data of Sample

Product information	
Manufacturer	HEWALEX
Model	KSR10
Type	Evacuated tube collector
Flow	Direct flow
Serial product	Yes
Drawing number	A complete set of technical drawings is filed at the test institute.
Serial number	0844
Date of manufacture	04.12.2008

Physical parameters	
Gross length	2.130 m
Gross width	0.856 m
Gross height	0.116 m
Gross area	1.823 m²
Aperture area	1.014 m²
Absorber area	0.931 m²
Weight empty	30.0 kg
Fluid capacity	1.8 l

Construction	
Type	Evacuated tube collector
Number of absorber elements	10
Absorber pitch	76.7 mm
Number of hydraulically parallel tubes	10
Number of thermally serial glazings	1
Material of glazing(s)	Glass tube
Thickness of glazing(s)	1.8 mm

Heat transfer fluid (manufacturers' recommendation)	
Type	Water-Propyleneglycol
Specifications	--

Flow (manufacturers' recommendation)	
Flow range	48 - 90 l/h
Rated flow	60 l/h

Absorber	
Absorber element	Copper sheet
Length of absorber element	1940.0 mm
Width of absorber element	48.0 mm
Thickness of absorber element	0.12 mm
Coating	Titanium-Nitrite-Oxide
Flowed through element	Coaxial copper pipe
Joining technique	Ultrasonic welded
Joining seam	Blank

Installation	
On tilted roof	Yes
In tilted roof	No
On flat roof	Yes
On flat roof with stand	Yes
Facade	Yes

Casing and insulation	
Casing material	Aluminium
Sealing material	EPDM
Insulation material	Rockwool, Polyurethane foam
Thickness (in mm)	15, 18
Aperture dimensions	1.954 m * 0.0519 m * 10

Limitations (manufacturers' information)	
Max. temperature	120°C
Max. pressure	6 bar
Other	--

Remarks on collector design
--

Test schedule	
Test procedure	EN12975:2006, Outdoor test
Sample received	15.12.2009
Start of test	15.01.2009
End of test	15.05.2009

1.2 Sketch of Collector

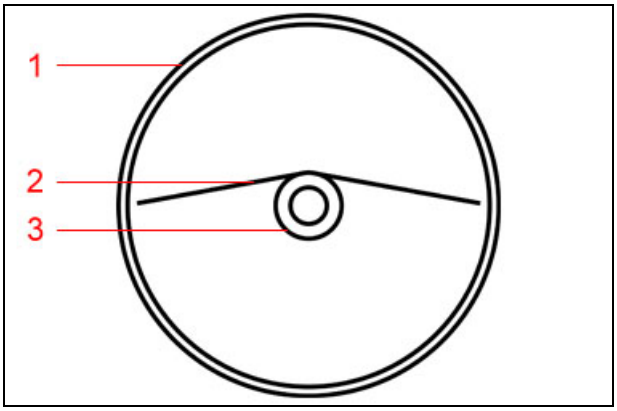

1.3 Specifications on Elements

1 Glazing

Material:	Glass tube
Thickness [mm]:	1.8
Properties:	Low ferrous content, anti-reflective treatment

2 Absorber

Absorber element:	Copper sheet
Flow-through element:	Coaxial copper pipe
Length of element [mm]:	1940
Width of element [mm]:	48
Flow type:	Parallel
Joining technique:	Ultrasonic welded
Joining seam:	Blank

2 Absorber coating

Tradename:	Tinox
Description:	Titanium-Nitrite-Oxide
Manufacturing process:	Physical vapour deposition (PVD)

3 Coaxial tube

Description:	Copper

1.4 Photo of Collector

1.5 Sketch of Collector Mounting

1.6 Labelling

The collector carries a label.	Yes
The label is visible.	Yes
The label is durable.	Yes

The label includes the following information:

Name of manufacturer	Yes
Collector type	Yes
Serial number	Yes
Year of production	Yes
Gross area of collector	Yes
Maximum operating pressure	Yes
Stagnation temperature for 1000 W/m^2 and 30°C	Yes
Volume of heat transfer fluid	Yes
Weight of empty collector	Yes
Made in ...	Yes

1.7 Safety

The collector provides for safe installation and mounting. It has no sharp edges, no loos connections, and no other potentially dangerous features.	Yes
If the weight of the empty collector exceeds 60 kg an anchorage for a lifting device is included, except for collectors that are assembled on the roof.	Yes
If the collector is made to be filled with a heat transfer fluid that is irritant to human skin or eyes or that is toxic, the collector carries a warning label.	Yes

1.8 Installer Instruction Manual

The collector is accompanied by an installer instruction manual.	Yes

The installer instruction manual includes the following information:

Dimensions and weight of the collector	Yes
Instructions about the transport and handling	Yes
Description of the mounting procedure	Yes
Recommendations about lightning protection	Yes
Instructions about the coupling of several collectors (up to 20 m^2).	Yes
Instructions for the connection of the collector field to the heat transfer circuit (up to 20 m^2).	Yes
Instructions for the dimension of the pipe connections for collector arrays (up to 20 m^2).	Yes
Recommendation about the heat transfer (also with respect to corrosion)	Yes
Precautions to be taken during filling, operation and service.	Yes
Maximum operating pressure	Yes
Pressure drop	Yes
Maximum and minimum tilt angle	Yes
Permissible wind and snow loads	Yes
Maintenance requirements	Yes
The documentation is available in the national language of the country where the collector is sold. (Manufacturers' information)	Yes

2 Test Methods and Results

2.1 Tests of Durability

The tests are carried out according to the EN 12975-2:2006, Chapter 5.
*Deviations from these test directions are marked with an *) and highlighted by italic writing.*

2.2 Test Sequence and Summary

Test		Date of test	Chap. of standard	Result
Internal pressure		12.01.2009	5.2	**Passed**
High-temperature resistance		06.04.2009	5.3	**Passed**
Exposure		21.01.2009 – 16.04.2009	5.4	**Passed**
External thermal shock	Shock Nr.1 Shock Nr.2	14.04.2009 15.04.2009	5.5	**Passed** **Passed**
Internal thermal shock	Shock Nr.1 Shock Nr.2	16.03.2009 09.04.2009	5.6	**Passed** **Passed**
Rain penetration		07.05.2009	5.7	**Passed**
Freeze resistance		--	5.8	**N/A**
Thermal performance		15.01.2009 – 21.04.2009	6.1 - 6.2 - 6.3	**Passed**
Impact resistance		--	5.10	**N/A**
Mechanical load		12.05.2009	5.9	**Passed**
Final inspection		15.05.2009	5.11	**Passed**

Remarks	The test sequence may have been adapted to the internal requirements of the test institute. The test “Thermal performance” may have been made with a conformity-checked second collector.

2.3 Internal Pressure Test

2.3.1 Remarks

--

2.3.2 Technical details of collector

Glazed/unglazed?	Glazed
Maximum operation pressure (Manufacturers' information)	6 bar

2.3.3 Test conditions

Surrounding temperature	20°C
Test pressure	9 bar
Duration	15 min

2.3.4 Test results

Observations	None
Major failures according to 5.3.1 of EN12975-1:2006	None

2.4 High-Temperature Resistance Test

2.4.1 Remarks

Outdoor test
Temperature sensor in the interior of a single pipe.

2.4.2 Test conditions

Collector tilt angle (degrees from horizontal)	43.9°
Average irradiance during test	1020 W/m²
Minimum irradiance during test	1004 W/m²
Average surrounding air speed	1.2 m/s
Average surrounding temperature	20.5°C
Minimum surrounding temperature	19.5°C
Average absorber temperature	131.4°C
Duration of test	>60 min

2.4.3 Test results

Observations	None
Major failures according to 5.3.1 of EN12975-1:2006	None

2.4.4 Determination of stagnation temperature

Temperature sensor in the interior of a single pipe

Stagnation temperature for 30°C/1000 W/m² Determined according to Annex C.2 of EN12975-2:2006	303°C

2.5 Exposure Test

2.5.1 Remarks

Outdoor exposure test. Collector installed on a tracker.

2.5.2 Test conditions

Part A	Exposition for at least 30 days with a minimum daily irradiation H ≥ 14MJ/m^2.
Part B	Exposition for at least 30 hours at irradiance G ≥ 850 W/m^2 and ambient temperature T_{amb} ≥ 10°C. The minimum duration of every period is Δt ≥ 30 min.

2.5.3 Climatic conditions for all days during the test (Part A)

Date	H [MJ/m²]	T_{amb} [°C]	Rain [mm]	Valid days
21.01.2009	1.4	1.1	0.0	0
22.01.2009	11.5	0.2	0.0	0
23.01.2009	0.7	3.1	0.0	0
24.01.2009	4.0	2.6	0.0	0
25.01.2009	18.1	3.0	0.0	1
26.01.2009	10.8	0.6	0.0	1
27.01.2009	0.7	1.4	0.0	1
28.01.2009	1.2	1.1	0.0	1
29.01.2009	3.0	1.7	0.0	1
30.01.2009	10.9	1.8	0.0	1
31.01.2009	1.5	0.2	0.0	1
01.02.2009	1.5	-0.7	0.0	1
02.02.2009	7.6	1.0	0.0	1
03.02.2009	17.1	3.4	0.0	2
04.02.2009	15.7	3.5	0.0	3
05.02.2009	14.1	3.7	0.0	4
06.02.2009	11.3	4.5	0.0	4
07.02.2009	1.4	3.2	0.0	4
08.02.2009	0.8	0.9	2.0	4
09.02.2009	6.8	1.1	1.0	4
10.02.2009	6.1	5.5	0.0	4
11.02.2009	6.7	1.3	0.0	4
12.02.2009	2.1	-0.1	0.0	4
13.02.2009	12.3	-0.9	0.0	4
14.02.2009	1.8	-1.4	0.0	4
15.02.2009	7.9	-2.5	0.0	4
16.02.2009	7.6	-0.9	0.0	4
17.02.2009	0.1	0.4	1.0	4
18.02.2009	2.6	-2.8	0.0	4
19.02.2009	14.3	-3.2	0.0	5
20.02.2009	2.7	-1.6	0.0	5
21.02.2009	11.6	2.2	0.0	5
22.02.2009	2.2	1.6	2.0	5
23.02.2009	2.2	2.5	0.0	5
24.02.2009	4.1	2.6	2.0	5
25.02.2009	29.1	2.2	2.0	6
26.02.2009	5.4	2.8	0.0	6

27.02.2009	12.2	4.5	0.0	6
28.02.2009	25.6	4.5	0.0	7
01.03.2009	7.6	4.7	0.0	7
02.03.2009	2.7	5.2	1.0	7
03.03.2009	7.4	10.1	1.0	7
04.03.2009	2.6	9.4	3.0	7
05.03.2009	2.4	1.9	16.0	7
06.03.2009	3.0	2.7	0.0	7
07.03.2009	23.4	3.7	0.0	8
08.03.2009	13.0	3.8	0.0	8
09.03.2009	8.3	4.1	0.0	8
10.03.2009	4.4	3.7	0.0	8
11.03.2009	13.3	4.4	0.0	8
12.03.2009	4.5	3.4	0.0	8
13.03.2009	10.4	8.4	0.0	8
14.03.2009	17.5	8.5	0.0	9
15.03.2009	2.8	8.1	1.0	9
16.03.2009	22.1	6.3	0.0	10
17.03.2009	22.2	7.1	0.0	11
18.03.2009	23.2	7.4	0.0	12
19.03.2009	14.1	5.9	0.0	13
20.03.2009	11.6	2.8	1.0	13
21.03.2009	34.0	2.6	0.0	14
22.03.2009	15.0	3.8	0.0	15
23.03.2009	12.8	6.7	0.0	15
24.03.2009	11.9	3.1	12.0	15
25.03.2009	4.4	4.1	3.0	15
26.03.2009	8.0	6.7	1.0	15
27.03.2009	9.0	8.2	7.0	15
28.03.2009	8.7	6.0	7.0	15
29.03.2009	4.0	5.1	1.0	15
30.03.2009	6.5	6.7	0.0	15
31.03.2009	4.2	6.1	0.0	15
01.04.2009	16.3	8.8	0.0	16
02.04.2009	11.7	8.8	0.0	16
03.04.2009	14.0	11.2	0.0	17
04.04.2009	18.0	12.2	0.0	18
05.04.2009	14.0	11.2	0.0	19
06.04.2009	14.0	11.3	0.0	20
07.04.2009	14.0	12.5	0.0	21
08.04.2009	18.9	13.0	0.0	22
09.04.2009	14.0	12.0	0.0	23
10.04.2009	34.8	14.9	0.0	24
11.04.2009	31.2	15.8	0.0	25
12.04.2009	17.6	14.5	0.0	26
13.04.2009	32.5	15.0	0.0	27
14.04.2009	32.0	15.2	0.0	28
15.04.2009	30.6	15.8	0.0	29
16.04.2009	14.0	12.5	4.0	30

2.5.4 Climatic conditions for all days during the test (Part B)

Date / Time	G [W/m^2]	T_{amb} [°C]	Δt [min]	Sum [min]
28.02.2009 13:11:30-14:35:00	934.8	11.0	83.5	83.5
16.03.2009 10:38:00-13:37:30	1034.4	12.7	179.5	263.0
17.03.2009 10:52:00-12:20:30	1015.9	11.8	88.5	351.5
18.03.2009 11:44:30-12:55:30	1011.4	13.8	71.0	422.5
22.03.2009 13:40:30-15:16:00	978.2	11.1	95.5	518.0
03.04.2009 11:23:30-15:06:30	970.7	18.5	223.0	741.0
04.04.2009 11:00:30-12:11:30	931.5	15.8	71.0	812.0
05.04.2009 10:37:30-14:59:30	936.9	17.1	262.0	1074.0
06.04.2009 10:34:30-15:44:30	984.3	19.5	310.0	1384.0
07.04.2009 10:32:30-16:02:30	1008.9	20.9	330.0	1714.0
09.04.2009 10:48:00-15:42:30	974.7	18.7	294.5	2008.5

2.5.5 Test results

2.5.5.1 Observations and evaluation

Evaluation according to the following key:
0 – no problem
1 – Minor problem
2 – Severe problem
* – Inspection or evaluation was not possible

Collector component	Potential problem	Result
Collector box / fasteners	Cracking / warping / corrosion / rain penetration	0
Collector mounting / structure	Strength / safety	0
Seals / gaskets	Cracking / adhesion / elasticity	0
Covers / reflectors	Cracking / crazing / buckling / delamination / warping / outgassing	0
Absorber coating	Cracking / crazing / blistering	0
Absorber tubes and headers	Deformation / corrosion / leakage / loss of bonding	0
Absorber mountings	Deformation / corrosion	0
Insulation	Water retention / outgassing / degradation	0
Major failures according to 5.3.1 of EN12975-1:2006	None	

2.6 External Thermal Shock

2.6.1 Remarks

Shock-Nr.1: Outdoor test
Temperature sensor attached to the connection pipe. Direct measurement of the absorber temperature is not possible.

Shock-Nr.2: Outdoor test
Temperature sensor attached to the connection pipe. Direct measurement of the absorber temperature is not possible.

2.6.2 Test conditions

Shock-Nr.		**1**	**2**
Conditioning phase			
Collector tilt angle	°	38.2	38.0
Average irradiance	W/m²	1017	1028
Minimum irradiance	W/m²	980	1001
Average surrounding temperature	°C	20.2	19.7
Minimum surrounding temperature	°C	19.5	18.7
Period during which the required conditions were maintained before the shock	min	> 60	> 60
Shock			
Spray rate	l/(s·m²)	0.03 - 0.05	0.03 - 0.05
Temperature of water spray	°C	approx. 15	approx. 15
Duration of water spray	min	15	15
Absorber temperature prior to the shock	°C	130.3	130.7
Test combined with „Exposure Test”		No	No
Test combined with „High-Temperature Resistance Test”		No	No

2.6.3 Test results

Observations	Shock Nr.1	None
	Shock Nr.2	None
Major failures according to 5.3.1 of EN12975-1:2006	Shock Nr.1	None
	Shock Nr.2	None

2.7 Internal Thermal Shock

2.7.1 Remarks

Shock-Nr.1: Outdoor test
Temperature sensor attached to the connection pipe. Direct measurement of the absorber temperature is not possible.

Shock-Nr.2: Outdoor test
Temperature sensor attached to the connection pipe. Direct measurement of the absorber temperature is not possible.

2.7.2 Test conditions

Shock-Nr.		**1**	**2**
Conditioning phase			
Collector tilt angle	°	54.9	41.4
Average irradiance	W/m²	1029	991
Minimum irradiance	W/m²	952	984
Average surrounding temperature	°C	13.5	16.5
Minimum surrounding temperature	°C	12.5	15.2
Period during which the required conditions were maintained before the shock	Min	> 60	> 60
Shock			
Flow rate of water	l/(s·m²)	≥ 0.02	≥ 0.02
Temperature of water prior to the shock	°C	approx. 15	approx. 15
Duration of water flow	Min	5	5
Absorber temperature prior to the shock	°C	131.7	124.0
Test combined with „Exposure Test“		No	No
Test combined with „High-Temperature Resistance Test”		No	No

2.7.3 Test results

Observations	Shock Nr.1	None
	Shock Nr.2	None
Major failures according to 5.3.1 of EN12975-1:2006	Shock Nr.1	None
	Shock Nr.2	None

2.8 Rain Penetration Test

2.8.1 Remarks

Outdoor test.
The collector is installed on an open frame. Spraying from all sides.

2.8.2 Test conditions

Collector tilt angle (degrees from horizontal)	30°
Flow rate of water	≥ 0.05 l/(s·m²)
Temperature of water spray	< 30°C
Duration	4 h

2.8.3 Determination of water penetration

Detection of ingress of water by the following method(s)
a) Visual inspection
b) Humidity measurement

The manifold case is opened after the rain test and inspected for any ingress of water.
In case of ingress of water the amount would be determined by weight.

2.8.4 Test results

Observations	None
Major failures according to 5.3.1 of EN12975-1:2006	None

2.9 Mechanical Load Test

2.9.1 Positive pressure test of the collector cover

2.9.1.1 Method used to apply pressure

The collector is placed horizontally inside a frame and is covered by a watertight foil. The frame is continuously filled with water until the required level for a 1000 Pa load is reached over the whole collector.

2.9.1.2 Test conditions

Maximum pressure load	1000 Pa

2.9.2 Negative pressure test of fixings between the cover and the collector box as well as for the collector mountings

2.9.2.1 Method used to apply pressure

The method for the negative pressure test described in the norm is not applicable for evacuated tube collectors. The ability to withstand negative mechanical loads is therefore theoretically assessed considering the mechanical construction.
Based on the experience of the test institute the construction of the collector itself, as well as of the fixings of the collector, are such that the negative mechanical loads prescribed by the norm would not lead to any damage.

2.9.3 Test results

Observations	None
Major failures according to 5.3.1 of EN12975-1:2006	None

2.10 Final Inspection

2.10.1.1 Observations and evaluation

Evaluation according to the following key:
0 – no problem
1 – Minor problem
2 – Severe problem
* – Inspection to establish the condition was not possible

Collector component	Potential problem	Result
Collector box / fastener	Cracking / warping / corrosion / rain penetration	0
Collector mounting / structure	Strength / safety	0
Seals / gaskets	Cracking / adhesion / elasticity	0
Covers / reflectors	Cracking / crazing / buckling / delamination / warping / outgassing	0
Absorber coating	Cracking / crazing / blistering	0
Absorber tubes and headers	Deformation / corrosion / leakage / loss of bonding	0
Absorber mountings	Deformation / corrosion	0
Insulation	Water retention / outgassing / degradation	1[+]

[+] Insulation partially slightly overheated

3 Remarks

This report must not be copied except in full.
The test methods applied fulfil the requirements of EN12975:2006.
The test results only refer to the tested collector sample.
This test report is made according to the requirements of EN12975:2006.
This test report fulfils the requirements of ISO17025.

Rapperswil, 24.02.2010

Dr. Andreas Bohren
Head of SPF Testing

Dipl.-Ing. Walter Gubler
Test engineer